Double Row Tapered Roller Bearing With Double Cone (Inch Series)

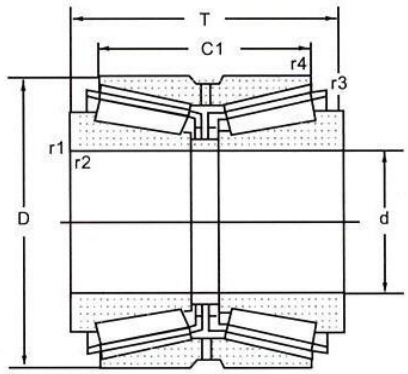

Bearing Numbers	Boundary dimensions(mm)						Basic load rating(kN)		Design	Abutment and fillet dimensions(mm)				Value				Weight(kg)
	d	D	T	C	$r_{1、2min}$	$r_{3、4min}$	Cr	Cor		$d_{a\ min}$	$D_{a\ max}$	$r_{b\ max}$	$r_{a\ max}$	e	Y_1	Y_2	Y_0	Refer
783/774D	100	180.975	104.775	85.725	1.6	3.6	440	750	1	123	171	1.6	3.6	0.39	1.8	2.6	1.7	10.6
52400/52637D	101.6	161.925	82.548	61.912	0.8	3.6	310	570	1	120	155	0.8	3.6	0.47	1.4	2.1	1.4	5.7
687/672D	101.6	168.275	92.075	69.85	0.8	3.6	380	685	1	121	161	0.8	3.6	0.47	1.4	2.1	1.4	7.3
780/773D	101.6	180	104.775	85.725	0.8	3.6	440	750	1	124	171	0.8	3.6	0.39	1.8	2.6	1.7	10.2
780/774D	101.6	180.975	104.775	85.725	1.6	3.6	440	750	1	124	171	1.6	3.6	0.39	1.8	2.6	1.7	10.4
861/854D	101.6	190.5	127	101.6	1.6	8	605	1000	1	130	180	1.6	8	0.33	2	3	2	14.4
HH221449/HH221410D	101.6	190.5	127	104.775	1.6	8	665	1040	1	131	183	1.6	8	0.33	2	3	2	14.3
98400/98789D	101.6	200.025	115.888	80.216	2.3	3.6	540	850	1	132	190	2.3	3.6	0.63	1.1	1.6	1	14.8
HH224335/HH224310D	101.6	212.725	142.875	117.475	1.6	7	975	1620	1	137	205	1.6	7	0.33	2.1	3.1	2	23.3
782/773D	104.775	180	104.775	85.725	0.8	3.6	440	750	1	125	171	0.8	3.6	0.39	1.8	2.6	1.7	9.7
786/774D	104.775	180.975	104.775	85.725	1.6	6.4	440	750	1	128	171	1.6	6.4	0.39	1.8	2.6	1.7	9.9
71412/71751D	104.775	190.5	106.632	80.962	1.6	3.6	510	925	1	131	182	1.6	3.6	0.42	1.6	2.4	1.6	12.2
56418/56650D	106.362	165.1	82.55	63.5	0.8	3.6	335	645	1	126	160	0.8	3.6	0.5	1.4	2	1.3	5.9
L521949/L521910D	107.95	146.05	49.212	39.688	0.8	1.5	147	330	1	120	141	0.8	1.5	0.39	1.7	2.6	1.7	2.2
56425/56650D	107.95	165.1	82.55	63.5	0.8	3.6	335	645	1	127	160	0.8	3.6	0.5	1.4	2	1.3	5.7
71425/71751D	107.95	190.5	106.362	80.962	1.6	3.6	510	925	1	133	182	1.6	3.6	0.42	1.6	2.4	1.6	11.8
HH224340/HH224310D	107.95	212.725	142.875	117.475	1.6	8	975	1620	1	142	205	1.6	8	0.33	2.1	3.1	2	22.1
EE342043/342091D	107.95	234.95	111.125	82.55	1.6	6.4	610	840	1	144	222	1.6	6.4	0.43	1.6	2.3	1.5	20
71432/71751D	109.952	190.5	106.362	80.962	1.6	3.6	510	925	1	134	182	1.6	3.6	0.42	1.6	2.4	1.6	11.5

64433/64700D	109.952	177.8	92.075	69.85	0.8	3.6	400	750	1	132	173	0.8	3.6	0.52	1.3	1.9	1.3	8
71437/71751D	111.125	190.5	106.362	80.962	1.6	3.6	510	925	1	135	182	1.6	3.6	0.42	1.6	2.4	1.6	11.3
64450/64700D	114.3	177.8	92.075	69.85	0.8	3.6	444	788	1	135	173	0.8	3.6	0.52	1.3	1.9	1.3	7.75
HH224346/HH224310D	114.3	212.725	142.875	117.475	1.6	7	975	1620	1	144	205	1.6	7	0.33	2.1	3.1	2	20.9
HH224346NA/HH224310D	114.3	212.725	142.875	117.475	1.6	3.6	975	1620	2	140	205	1.6	3.6	0.33	2.1	3.1	2	21
HM926740/HM926710D	114.3	228.6	115.888	84.138	2.3	3.6	645	1060	1	152	220	2.3	3.6	0.74	0.92	1.4	0.9	20.5
HH224349/HH224310D	114.976	212.725	142.875	117.475	1.6	7	975	1620	1	144	205	1.6	7	0.33	2.1	3.1	2	20.8
M224748/M224710D	120	174.625	77.788	61.913	0.8	3.6	365	765	1	137	169	0.8	3.6	0.33	2	3	2	5.8
M224749/M224710D	120.65	174.625	77.788	61.913	0.8	3.6	365	765	1	138	169	0.8	3.6	0.33	2	3	2	5.7
795/792D	120.65	206.375	107.95	82.55	0.8	3.2	545	1060	1	149	199	0.8	3.2	0.46	1.5	2.2	1.4	14
48286/48220D	123.825	182.562	85.725	73.025	0.8	3.6	390	885	1	143	177	0.8	3.6	0.31	2.2	3.3	2.2	7.4
95491/95927D	124.943	234.95	142.875	114.3	1.6	6.4	875	1580	1	162	226	1.6	6.4	0.37	1.8	2.7	1.8	25.7
L225849/L225812D	127	169.975	58.738	49.213	1	1.6	225	501	1	135.2	161.8	1	1.6	0.33	2.03	3.02	1.98	3.45
48291/48220D	127	182.563	85.725	73.025	0.8	3.6	389	858	1	139.2	173.2	0.8	3.6	0.31	2.21	3.29	2.16	6.99
67388/67322D	127	196.85	101.6	85.725	0.8	3.6	535	1120	1	150	192	0.8	3.6	0.34	2	2.9	1.9	11.1
67388/67323D	127	196.85	107.95	92.075	0.8	3.6	534	1120	1	139.2	188.8	0.8	3.6	0.34	1.96	2.92	1.92	11.4
67388/67325D	127	200.025	101.6	85.725	0.8	3.6	535	1120	1	150	193	0.8	3.6	0.34	2	2.9	1.9	11.7
798/792D	127	206.375	107.95	82.55	0.8	3.6	558	1100	1	139.2	194.1	0.8	3.6	0.46	1.47	2.19	1.44	13.2
74500/74851D	127	215.9	106.362	80.962	1.6	3.6	495	985	1	157	208	1.6	3.6	0.49	1.4	2.1	1.4	15
HM926747/HM926710D	127	228.6	115.888	84.138	2.3	3.6	645	1060	1	158	220	2.3	3.6	0.74	0.92	1.4	0.9	18.3
127KDE2301	127	230	126	84	1.6	4	645	1060	1	158	220	1.6	4	0.74	0.92	1.4	0.9	19.6
95500/95927D	127	234.95	142.875	114.3	1.6	6.4	875	1580	1	163	226	1.6	6.4	0.37	1.8	2.7	1.8	25.2
EE153050/153103D	127	258.762	177.8	136.525	1.6	9.6	975	1600	1	167	243	1.6	9.6	0.32	2.1	3.1	2.1	38
HM926749/HM926710D	127.792	228.6	115.888	84.138	2.3	3.6	645	1060	1	158	220	2.3	3.6	0.74	0.92	1.4	0.9	18.1
799/792D	128.588	206.375	107.95	82.55	0.8	3.2	545	1060	1	153	199	0.8	3.2	0.46	1.5	2.2	1.4	12.7
67389/67322D	130.175	196.85	101.6	85.725	0.8	3.2	535	1120	1	152	192	0.8	3.2	0.34	2	2.9	1.9	10.6
67389/67325D	130.175	200.025	101.6	85.725	0.8	3.2	535	1120	1	152	192	0.8	3.2	0.34	2	2.9	1.9	11.2
799A/792D	130.175	206.375	107.95	82.55	0.8	3.2	545	1060	1	154	199	0.8	3.2	0.46	1.5	2.2	1.4	12.4
L327249/L327210D	133.35	177.008	57.15	47.625	0.8	1.5	213	515	1	147	172	0.8	1.5	0.35	1.9	2.9	1.9	3.7
L327248NA/L327210D	133.35	177.008	60.325	47.625	0.8	1.5	241	557	1	141.6	169	0.8	1.5	0.35	1.94	2.89	1.9	3.79
48385/48320D	133.35	190.5	85.725	73.025	0.8	3.6	370	880	1	153	185	0.8	3.6	0.32	2.1	3.1	2.1	7.7
67390/67322D	133.35	196.85	101.6	85.725	0.8	3.6	535	1120	1	153	192	0.8	3.6	0.34	2	2.9	1.9	10
67390/67325D	133.35	200.025	101.6	85.725	0.8	3.6	535	1120	1	153	193	0.8	3.6	0.34	2	2.9	1.9	10.6
74525/74851D	133.35	215.9	106.362	80.962	1.6	3.6	495	985	1	160	208	1.6	3.6	0.49	1.4	2.1	1.4	14
95525/95927D	133.35	234.95	142.875	114.3	1.6	9.6	875	1580	1	169	226	1.6	9.6	0.37	1.8	2.7	1.8	23.8
48393/48320D	136.525	190.5	85.725	73.025	0.8	3.6	370	880	1	155	185	0.8	3.6	0.32	2.1	3.1	2.1	7.3
74537/74851D	136.525	215.9	106.362	80.962	1.6	3.6	495	985	1	162	208	1.6	3.6	0.49	1.4	2.1	1.4	13.4
896/892D	136.525	228.6	123.825	98.425	1.6	3.6	650	1240	1	163	219	1.6	3.6	0.42	1.6	2.4	1.6	18.7
99537/99102D	136.525	254	149.225	111.125	1.6	7.1	941	1830	1	155.7	236.4	1.6	7.1	0.41	1.66	2.47	1.62	31.9
99537/99101D	136.525	254	152.4	114.3	1.6	7.1	885	1660	1	178	245	1.6	7.1	0.41	1.7	2.5	1.6	31.2
74550/74851D	139.7	215.9	106.362	80.962	1.6	3.6	495	985	1	163	208	1.6	3.6	0.49	1.4	2.1	1.4	12.8
73551/73876D	139.7	222.25	75.692	53.975	2.3	3.6	325	535	1	162	211	2.3	3.6	0.44	1.5	2.3	1.5	9.3
898/892D	139.7	228.6	123.825	98.425	1.6	3.6	753	1460	1	151.9	214.2	1.6	3.6	0.42	1.6	2.39	1.57	18.5
HM231132/HM231111D	139.7	236.538	131.762	106.362	1.6	3.6	775	1440	1	168	227	1.6	3.6	0.32	2.1	3.2	2.1	21
HM231132/HM231116D	139.7	241.3	131.762	106.362	1.6	3.6	775	1440	1	168	230	1.6	3.6	0.32	2.1	3.2	2.1	22.6
81550/81963D	139.7	244.475	107.95	79.375	1.6	3.6	552	989	1	151.9	226.5	1.6	3.6	0.35	1.93	2.88	1.89	18.8
99550/99102D	139.7	254	149.225	111.125	1.6	7	1026	1862	1	179	245	1.6	7	0.4	1.7	2.5	1.6	31
99550/99101D	139.7	254	152.4	114.3	1.6	7	885	1660	1	179	245	1.6	7	0.41	1.7	2.5	1.6	30.4
EE107055/107105D	139.7	268.288	160.338	125.413	1.6	6.4	1130	2090	1	157.5	249	1.6	6.4	0.39	1.74	2.59	1.7	39.9
EE750558/751204D	139.7	304.8	135.733	97.633	1.6	3.2	1030	1600	1	151.1	267.5	1.6	3.2	0.33	2.03	3.02	1.98	44.7

HH234031/HH234011D	139.7	307.975	200.025	155.575	1.6	3.2	1740	2780	1	180	285	1.6	3.2	0.33	2.07	3.08	2.02	65.9
EE450551/451215D	139.7	307.975	200.025	146.05	2.4	9.5	1360	2300	1	163.7	274.9	2.4	9.5	0.33	2.07	3.09	2.03	66.2
48684/48620D	142.875	200.025	87.315	73.025	0.8	8	390	915	1	167	195	0.8	8	0.34	2	3	2	7.9
48686/48620D	142.875	200.025	93.665	73.025	0.8	3.6	422	982	1	155.1	190.1	0.8	3.6	0.34	2.01	2.99	1.96	8.43
HM231136/HM231111D	142.875	236.538	131.763	106.363	1.6	3.6	856	1660	1	155.1	222.7	1.6	3.6	0.32	2.12	3.15	2.07	21.8
HM231136/HM231116D	142.875	241.3	131.762	106.362	1.6	3.6	685	1360	1	171	230	1.6	3.6	0.44	1.5	2.3	1.5	22.4
36690/36620D	146.05	193.675	65.085	53.975	0.8	1.5	303	660	1	161	188	0.8	1.5	0.37	1.8	2.7	1.8	5
HM231140/HM231111D	146.05	236.538	131.762	106.362	1.6	3.6	775	1440	1	171	227	1.6	3.6	0.32	2.1	3.2	2.1	19.6
82576/82932D	146.05	236.538	131.762	106.362	1.6	3.6	685	1360	1	173	228	1.6	3.6	0.44	1.5	2.3	1.5	20.4
HM231140NA/HM231111D	146.05	236.538	131.762	106.362	1.6	3.6	775	1440	2	171	227	1.6	3.6	0.32	2.1	3.2	2.1	19.7
HM231140/HM231116D	146.05	241.3	131.762	106.362	1.6	3.6	775	1440	1	171	230	1.6	3.6	0.32	2.1	3.2	2.1	21.2
HM231140NA/HM231116D	146.05	241.3	131.762	106.362	1.6	3.6	775	1440	2	171	230	1.6	3.6	0.32	2.1	3.2	2.1	21.3
82576/82951D	146.05	241.3	131.762	106.362	1.6	3.6	719	1460	1	158.3	224.3	1.6	3.6	0.44	1.53	2.27	1.49	22.6
81575/81963D	146.05	244.475	107.95	79.375	1.6	3.6	570	1020	1	175	235	1.6	3.6	0.35	1.9	2.9	1.9	17.9
99575/99102D	146.05	254	149.225	111.125	1.6	7	885	1660	1	182	245	1.6	7	0.41	1.7	2.5	1.6	28
99575/99101D	146.05	254	152.4	114.3	1.6	7	941	1830	1	165.3	236.4	1.6	7	0.41	1.66	2.47	1.62	30
EE107057/107105D	146.05	268.288	160.338	125.412	1.6	7	1040	1960	1	184	256	1.6	7	0.39	1.7	2.6	1.7	36.5
EE750576/751204D	146.05	304.8	135.733	97.633	1.6	3.2	1090	1560	1	180	285	1.6	3.2	0.33	2	3	2	42.1
HH234040/HH234011D	146.05	307.975	200.025	155.575	2.3	9.7	1510	2380	1	194	294	2.3	9.7	0.33	2.1	3.1	2	61.6
EE450577/451215D	146.05	307.975	200.025	146.05	2.3	9.7	1360	2300	1	170.1	274.9	2.3	9.7	0.33	2.07	3.09	2.03	63.9
HM231148/HM231111D	149.225	236.538	131.762	106.362	1.6	6.4	775	1440	1	176	227	1.6	6.4	0.32	2.1	3.2	2.1	18.8
HM231149/HM231111D	149.225	236.538	131.762	106.362	1.6	3.6	775	1440	1	173	227	1.6	3.6	0.32	2.1	3.2	2.1	18.8
82587/82932D	149.225	236.538	131.762	106.362	1.6	3.6	685	1360	1	175	228	1.6	3.6	0.44	1.5	2.3	1.5	19.7
HM231149NA/HM231111D	149.225	236.538	131.762	106.362	1.6	3.6	775	1440	2	173	227	1.6	3.6	0.32	2.1	3.2	2.1	18.9
HM231148/HM231111D	149.225	236.538	131.762	106.362	1.6	6.4	856	1660	1	167	222.7	1.6	6.4	0.32	2.12	3.15	2.07	20.2
HM231149/HM231111D	149.225	236.538	131.762	106.362	1.6	3.6	856	1660	1	161.4	222.7	1.6	3.6	0.32	2.12	3.15	2.07	20.3
82587/82932D	149.225	236.538	131.762	106.362	1.6	3.6	719	1460	1	161.4	224.3	1.6	3.6	0.44	1.53	2.27	1.49	20.4
HM231149/HM231116D	149.225	241.3	131.762	106.362	1.6	3.6	775	1440	1	173	230	1.6	3.6	0.32	2.1	3.2	2.1	20.4
82587/82951D	149.225	241.3	131.762	106.362	1.6	3.6	685	1360	1	175	230	1.6	3.6	0.44	1.5	2.3	1.5	21
HM231149NA/HM231116D	149.225	241.3	131.762	106.362	1.6	3.6	775	1440	2	173	230	1.6	3.6	0.32	2.1	3.2	2.1	20.5
HM231148/HM231116D	149.225	241.3	131.762	106.362	1.6	6.4	856	1660	1	167	222.7	1.6	6.4	0.32	2.12	3.15	2.07	21.7
HM231149/HM231116D	149.225	241.3	131.762	106.362	1.6	3.6	856	1660	1	161.4	222.7	1.6	3.6	0.32	2.12	3.15	2.07	21.8
99587/99102D	149.225	254	149.225	111.125	1.6	6.4	885	1660	1	184	245	1.6	6.4	0.41	1.7	2.5	1.6	27.4
99587/99101D	149.225	254	152.4	114.3	1.6	6.4	941	1830	1	168.4	236.4	1.6	6.4	0.41	1.66	2.47	1.62	29.1
81590/81963D	150	244.475	107.95	79.375	1.6	3.6	552	989	1	162.2	226.5	1.6	3.6	0.35	1.93	2.88	1.89	16.8
81593/81963D	150.812	244.475	107.95	79.375	1.6	3.6	570	1020	1	177	235	1.6	3.6	0.35	1.9	2.9	1.9	16.9
M231648/M231610D	152.4	222.25	100.01	76.2	0.8	8	490	1060	1	179	215	0.8	8	0.33	2	3	2	11.9
M231649/M231610D	152.4	222.25	100.01	76.2	0.8	3.6	575	1187	1	175	215	0.8	3.6	0.33	2	3	2	12
M231648/M231610D	152.4	222.25	100.01	76.2	0.8	8	541	1190	1	173.2	209.3	0.8	8	0.33	2.03	3.02	1.98	11.8
M231649/M231610D	152.4	222.25	100.01	76.2	0.8	3.6	541	1190	1	164.6	209.3	0.8	3.6	0.33	2.03	3.02	1.98	11.9
M231649/M231611D	152.4	222.25	106.36	82.55	0.8	3.6	490	1060	1	175	215	0.8	3.6	0.33	2	3	2	12.5
81600/81693D	152.4	244.475	107.95	79.375	1.6	3.6	570	1020	1	178	235	1.6	3.6	0.35	1.9	2.9	1.9	16.6
99600/99102D	152.4	254	149.225	111.125	1.6	7	885	1660	1	185	245	1.6	7	0.41	1.7	2.5	1.6	26.5
99600/99101D	152.4	254	152.4	114.3	1.6	7	885	1660	1	185	245	1.6	7	0.41	1.7	2.5	1.6	27.1
EE107060/107105D	152.4	268.288	160.338	125.412	1.6	7	1040	1960	1	187	256	1.6	7	0.39	1.7	2.6	1.7	34.6
EE450601/451215D	152.4	307.975	200.025	146.05	2.3	9.7	1280	2150	1	199	289	2.3	9.7	0.33	2.1	3.1	2	60.1
HH234048/HH234011D	152.4	307.975	200.025	155.575	2.3	9.7	1510	2380	1	197	294	2.3	9.7	0.33	2.1	3.1	2	59.3
81606/81963D	153.988	244.475	107.95	79.375	1.6	3.6	552	989	1	166.2	226.5	1.6	3.6	0.35	1.93	2.88	1.89	16
46780/46720D	158.75	225.425	85.725	69.85	0.8	3.6	410	1080	1	183	219	0.8	3.6	0.38	1.8	2.6	1.7	11.1
158KBE2851	158.75	288.925	142.875	111.125	1.6	7	1050	1870	1	201	278	1.6	7	0.32	2.1	3.2	2.1	37.3

EE280626/281201D	158.75	304.8	147.838	98.425	1.6	7	939	1600	1	176.6	281.2	1.6	7	0.36	1.87	2.79	1.83	43
81629/81963D	159.951	244.475	107.95	79.375	1.6	3.6	570	1020	1	182	235	1.6	3.6	0.35	1.9	2.9	1.9	15.1
HM237532/HM237510D	160.325	288.925	142.875	111.125	1.6	7	1050	1870	1	202	278	1.6	7	0.32	2.1	3.2	2.1	36.8
HM237532/HM237511XD	160.325	288.925	146.05	114.3	1.6	7	1080	190	1	179.5	270.2	1.6	7	0.32	2.12	3.15	2.07	37.9
EE117063/117148D	161.925	374.65	184.15	130.175	1.6	7	1460	2180	1	217	355	1.6	7	0.71	0.96	1.4	0.93	89.3
L433749/L433710D	165.1	215.9	58.74	47.625	0.8	1.5	263	590	1	180	210	0.8	1.5	0.36	1.9	2.8	1.8	5.3
46790/46720D	165.1	225.425	85.725	69.85	0.8	8	470	1121	1	186	219	0.8	8	0.37	1.8	2.7	1.8	10
46790R/46720D	165.1	225.425	85.725	69.85	0.8	3.6	442	1140	1	177.3	215	0.8	3.6	0.38	1.76	2.62	1.72	9.64
67780/67720D	165.1	247.65	103.188	84.138	0.8	3.6	595	1410	1	194	241	0.8	3.6	0.44	1.5	2.3	1.5	17.2
67780/67721D	165.1	247.65	106.362	87.312	0.8	3.6	593	1400	1	177.3	237.6	0.8	3.6	0.44	1.54	2.29	1.5	17.4
M235145/M235113D	165.1	254	101.6	76.2	1.6	4.8	635	1190	1	191	244	1.6	4.8	0.32	2.1	3.2	2.1	16.4
HM237535/HM237510D	165.1	288.925	142.875	111.125	1.6	7	1050	1870	1	204	278	1.6	7	0.32	2.1	3.2	2.1	35.4
94649/94114D	165.1	288.925	142.875	111.125	1.6	7	1111	2166	1	206	277	1.6	7	0.46	1.5	2.2	1.4	38
HM237536NA/HM237510D	165.1	288.925	142.875	111.125	1.6	3.6	1080	1950	1	177.3	270.2	1.6	3.6	0.32	2.12	3.15	2.07	36.1
94650/94114D	165.1	288.925	142.875	111.125	1.6	3.6	943	1920	1	177.3	269.8	1.6	3.6	0.47	1.44	2.15	1.41	37.8
HM237535/HM237511D	165.1	288.925	146.05	114.3	1.6	7	1050	1870	1	204	278	1.6	7	0.32	2.1	3.2	2.1	36
94649/94118D	165.1	298.45	142.875	111.125	1.6	7	943	1920	1	184.3	269.8	1.6	7	0.47	1.44	2.15	1.41	41.5
94650/94118D	165.1	298.45	142.875	111.125	1.6	3.6	943	1920	1	177.3	269.8	1.6	3.6	0.47	1.44	2.15	1.41	41.6
EE618065/618136D	165.1	347.662	146.05	107.95	1.6	9.7	1310	2010	1	214	326	1.6	9.7	0.33	2	3	2	58.7
EE420651/421451D	165.1	368.3	193.675	136.525	1.6	9.7	1500	2690	1	234	353	1.6	9.7	0.42	1.6	2.4	1.6	93
46790R/46720D	165.496	225.425	95.25	69.85	0.8	3.6	442	1140	1	177.7	215	0.8	3.6	0.38	1.76	2.62	1.72	10.3
46792R/46720D	166.688	225.425	85.725	69.85	0.8	3.6	442	1140	1	178.9	215	0.8	3.6	0.38	1.76	2.62	1.72	9.37
67782/67720D	168.275	247.65	103.188	84.138	0.8	3.6	595	1410	1	195	241	0.8	3.6	0.44	1.5	2.3	1.5	16.5
67782/67721D	168.275	247.65	106.362	87.312	0.8	3.6	593	1400	1	180.5	237.6	0.8	3.6	0.44	1.54	2.29	1.5	16.7
M235149/M235113D	170	254	101.6	76.2	1.6	4.8	635	1190	1	194	244	1.6	4.8	0.32	2.1	3.2	2.1	15.4
94675/94114D	171.45	288.925	142.875	111.125	1.6	7	943	1920	1	190.7	269.8	1.6	7	0.47	1.44	2.15	1.41	35.9
94675/94118D	171.45	298.45	142.875	111.125	1.6	7	943	1920	1	190.7	269.8	1.6	7	0.47	1.44	2.15	1.41	39.6
67787/67720D	174.625	247.65	103.188	84.138	0.8	3.6	595	1410	1	199	241	0.8	3.6	0.44	1.5	2.3	1.5	15.1
67786/67720D	174.625	247.65	103.188	84.138	0.8	7.9	593	1400	1	195.4	237.6	0.8	7.9	0.44	1.54	2.29	1.5	14.8
67786/67721D	174.625	247.65	106.362	87.312	0.8	7.9	593	1400	1	195.4	237.6	0.8	7.9	0.44	1.54	2.29	1.5	15.2
67787/67721D	174.625	247.65	106.362	87.312	0.8	3.6	593	1400	1	186.8	237.6	0.8	3.6	0.44	1.54	2.29	1.5	15.3
94687/94114D	174.625	288.925	142.875	111.125	0.8	3.6	940	1900	1	204	272	0.8	3.6	0.47	1.44	2.15	1.41	33.1
HM237542/HM237510D	174.625	288.925	142.875	111.125	1.6	7	1080	1950	1	193.8	270.2	1.6	7	0.32	2.12	3.15	2.07	33.1
94687/94114D	174.625	288.925	142.875	111.125	1.6	7	943	1920	1	193.8	269.8	1.6	7	0.47	1.44	2.15	1.41	34.9
HM237542/HM237511D	174.625	288.925	146.05	114.3	1.6	7	1050	1870	1	209	278	1.6	7	0.32	2.1	3.2	2.1	33.1
94687/94118D	174.625	298.45	142.875	111.125	1.6	7	943	1920	1	193.8	269.8	1.6	7	0.47	1.44	2.15	1.41	38.7
36990/36920D	177.8	227.012	66.672	52.388	0.8	1.5	299	785	1	193	222	0.8	1.5	0.44	1.5	2.3	1.5	6.4
67790/67720D	177.8	247.65	103.188	84.138	0.8	3.6	595	1410	1	200	241	0.8	3.6	0.44	1.5	2.3	1.5	14.4
67991/67720D	177.8	247.65	103.188	84.138	0.8	10.4	595	1410	1	207	241	0.8	10.4	0.44	1.5	2.3	1.5	14.2
67790/67721D	177.8	247.65	106.362	87.312	0.8	3.6	593	1400	1	190	237.6	0.8	3.6	0.44	1.54	2.29	1.5	14.6
67791/67721D	177.8	247.65	106.362	87.312	0.8	10.4	593	1400	1	203.6	237.6	0.8	10.4	0.44	1.54	2.29	1.5	14.4
M238840/M238810D	177.8	269.875	119.062	93.662	1.6	3.6	836	1805	1	208	262	1.6	3.6	0.33	2	3	2	23
87700/87112D	177.8	282.575	107.95	79.375	1.6	3.6	702	1450	1	190	266.3	1.6	3.6	0.42	1.62	2.42	1.59	23.8
EE91702/91113XD	177.8	285.75	136.525	92.075	1.6	6.4	775	1450	1	210	274	1.6	6.4	0.43	1.6	2.3	1.5	28.7
HM237545/HM237509D	177.8	288.925	142.875	111.125	1.6	7	1050	1870	1	210	278	1.6	7	0.32	2.1	3.2	2.1	31.7
94700/94114D	177.8	288.925	142.875	111.125	1.6	7	930	1880	1	213	277	1.6	7	0.47	1.4	2.1	1.4	33.6
HM237545NA/HM237510D	177.8	288.925	142.875	111.125	1.6	5.6	1080	1950	1	194	270.2	1.6	5.6	0.32	2.12	3.15	2.07	32.2
HM237545NA/HM237510D	177.8	288.925	142.875	111.125	1.6	5.6	1050	1870	2	209	278	1.6	5.6	0.32	2.1	3.2	2.1	31.9
HM237545/HM237511D	177.8	288.925	146.05	114.3	1.6	7	1050	1870	1	210	278	1.6	7	0.32	2.1	3.2	2.1	32.2
94700/94118D	177.8	298.45	142.875	111.125	1.6	7	930	1880	1	213	282	1.6	7	0.47	1.4	2.1	1.4	37.5

EE280702/281201D	177.8	304.8	147.838	98.425	1.6	6.4	939	1600	1	195.6	281.2	1.6	6.4	0.36	1.87	2.79	1.83	37.2
H239640/H239612D	177.8	320.675	185.738	138.112	1.6	3.6	1470	2530	1	215	309	1.6	3.6	0.32	2.1	3.2	2.1	55.6
177KBE3251	177.8	320.675	185.738	138.112	1.6	3.6	1270	2420	1	218	309	1.6	3.6	0.49	1.4	2.1	1.4	58.9
EE222070/222127D	177.8	320.675	185.738	138.112	1.6	3.6	1280	2450	1	190	297.9	1.6	3.6	0.4	1.68	2.5	1.64	59
EE420701/421451D	177.8	368.3	193.675	136.525	1.6	12.7	1500	2690	1	243	353	1.6	12.7	0.42	1.6	2.4	1.6	87.6
93708/93127D	179.972	317.5	146.05	111.125	1.6	3.6	990	2120	1	224	306	1.6	3.6	0.52	1.3	1.9	1.3	46.9
93708/93128XD	179.972	319.976	146.05	111.125	1.6	3.6	990	2120	1	224	307	1.6	3.6	0.52	1.3	1.9	1.3	49.1
LL537649/LL537610D	184.15	236.538	55.56	41.275	0.8	1.5	265	580	1	199	230	0.8	1.5	0.37	1.8	2.7	1.8	5.5
LM637349NW/LM637310D	184.15	242.888	95.25	69.85	0.8	3.6	425	1200	2	199	236	0.8	3.6	0.42	1.6	2.4	1.6	11.5
67883/67820D	184.15	266.7	103.188	84.138	0.8	3.6	590	1440	1	212	260	0.8	3.6	0.48	1.4	2.1	1.4	18.4
67884/67820D	187.325	266.7	103.188	84.138	0.8	3.6	614	1520	1	199.5	256.5	0.8	3.6	0.48	1.41	2.11	1.38	18
M238849/M238810D	187.325	269.875	119.062	93.662	1.6	3.6	704	1610	1	199.5	255	1.6	3.6	0.33	2.03	3.02	1.98	20.4
87737/87112D	187.325	282.575	107.95	79.375	1.6	3.6	702	1450	1	199.5	266.3	1.6	3.6	0.42	1.62	2.42	1.59	21.4
H239649/H239612D	187.325	320.675	185.738	138.112	1.6	5.6	1470	2530	1	222	309	1.6	5.6	0.32	2.1	3.2	2.1	51.6
222075/222127D	187.325	320.675	185.738	138.112	1.6	5.6	1280	2450	1	203.5	297.9	1.6	5.6	0.4	1.68	2.5	1.64	55
H239649NA/H239612D	187.325	320.675	185.738	138.112	1.6	5.6	1470	2530	2	222	309	1.6	5.6	0.32	2.1	3.2	2.1	51.8
67885/67820D	190.5	266.7	103.188	84.138	0.8	3.6	590	1440	1	215	260	0.8	3.6	0.48	1.4	2.1	1.4	16.9
87750/87112D	190.5	282.575	107.95	79.375	1.6	3.6	615	1200	1	217	273	1.6	3.6	0.42	1.6	2.4	1.6	20.2
93750/93127D	190.5	317.5	146.05	111.125	1.6	4.3	990	2120	1	231	306	1.6	4.3	0.52	1.3	1.9	1.3	43.7
93750/93128XD	190.5	319.977	146.05	111.125	1.6	4.3	1040	2270	1	204.1	294.5	1.6	4.3	0.52	1.29	1.92	1.26	44.8
EE420751/421451D	190.5	368.3	193.675	136.525	1.6	6.4	1610	2920	1	208.3	334	1.6	6.4	0.4	1.68	2.5	1.64	85.2
67887/67820D	192.088	266.7	103.188	84.138	0.8	10.4	614	1520	1	217.9	256.5	0.8	10.4	0.48	1.41	2.11	1.38	16.6
87762/87112D	193.675	282.575	107.95	79.375	1.6	3.6	702	1450	1	205.9	266.3	1.6	3.6	0.42	1.62	2.42	1.59	19.8
L540049/L540010D	196.85	254	61.91	47.625	0.8	1.5	305	715	1	213	247	0.8	1.5	0.4	1.7	2.5	1.7	7.4
LM739749/LM739710D	196.85	257.175	85.725	66.675	0.8	3.6	459	1260	1	209.1	247	0.8	3.6	0.45	1.51	2.25	1.48	11.2
93775/93127D	196.85	317.5	146.05	111.125	1.6	4.3	990	2120	1	234	306	1.6	4.3	0.52	1.3	1.9	1.3	41.5
93775/93128XD	196.85	319.977	146.05	111.125	1.6	4.3	1040	2270	1	210.5	294.5	1.6	4.3	0.52	1.29	1.92	1.26	42.6
M241543/M241510D	200.025	292.1	125.415	101.6	1.6	4.3	915	2070	1	219	279	1.6	4.3	0.33	1.03	3.02	1.98	24.8
93787/93127D	200.025	317.5	146.05	111.125	1.6	4.3	1040	2270	1	214.6	294.5	1.6	4.3	0.52	1.29	1.92	1.26	40.5
93787/93128XD	200.025	319.977	146.05	111.125	1.6	4.3	1040	2270	1	214.6	294.5	1.6	4.3	0.52	1.29	1.92	1.26	41.5
HM743337/HM743310D	200.025	333.375	149.225	114.3	1.6	6.4	1210	240	1	218.8	315.5	1.6	6.4	0.44	1.54	2.29	1.5	49.4
EE130787/131401D	200.025	355.6	152.4	111.125	1.6	6.4	1190	2470	1	250	340	1.6	6.4	0.33	3	0.33	2	60.3
EE130787/131402D	200.025	355.6	158.75	117.475	0.8	6.8	1190	2470	1	250	341	0.8	6.8	0.33	3	0.33	2	62.4
H247535/H247510D	200.025	384.175	238.125	193.675	1.6	6.4	2090	4450	1	258	369	1.6	6.4	0.33	3	0.33	2	122
93787/93127D	200.025	317.5	146.05	111.125	1.6	4.3	1110	2280	1	225	300	1.6	4.3	0.52	1.3	1.9	1.3	41.5
EE420793/421451D	201.612	368.3	193.675	136.525	1.6	4.3	1500	2690	1	246	353	1.6	4.3	0.42	2.4	0.42	1.6	77.2
LM241149/LM241110D	203.2	276.225	90.485	73.025	0.8	3.6	580	1240	1	224	269	0.8	3.6	0.32	3.2	0.32	2.1	13.9
LM241149NW/LM241110D	203.2	276.225	95.25	73.025	0.8	3.6	580	1240	2	226	269	0.8	3.6	0.32	2.1	3.2	2.1	14.7
67983/67920D	203.2	282.575	101.6	82.55	0.8	3.6	598	1410	1	216.4	271.5	0.8	3.6	0.51	1.33	1.97	1.3	18.3
67983/67921D	203.2	282.575	107.95	88.9	0.8	3.6	598	1410	1	216.4	271.5	0.8	3.6	0.51	1.33	1.97	1.3	19.3
M241547/M241510D	203.2	292.1	125.415	101.6	1.6	3.6	930	2100	1	229	283	1.6	3.6	0.33	3	0.33	2	25.7
132083/132126D	203.2	317.5	120.65	88.9	1.6	6.4	753	1450	1	222	292.3	1.6	6.4	0.31	2.15	3.21	2.11	30.9
EE132083/132126D	203.2	317.5	127	88.9	1.6	4	790	1450	1	232	302	1.6	4	0.31	3.2	0.31	2.1	30.6
93800/93127D	203.2	317.5	146.05	111.125	1.6	4	990	2120	1	237	306	1.6	4	0.52	1.9	0.52	1.3	39
93800A/93127D	203.2	317.5	146.05	111.125	1.6	7.9	1040	2270	1	225	294.5	1.6	7.9	0.52	1.29	1.92	1.26	39.2
93800/93128D	203.2	319.976	146.05	111.125	1.6	4.3	990	2120	1	237	307	1.6	4.3	0.52	1.9	0.52	1.3	40.5
EE420801/421451D	203.2	368.3	193.675	136.525	1.6	3.2	1500	2690	1	246	353	1.6	3.2	0.42	2.4	0.42	1.6	76.4
EE420801/421462XD	203.2	371.475	193.675	136.525	1.6	3.2	1610	2920	1	215.6	334	1.6	3.2	0.4	1.68	2.5	1.64	81.3
EE114080/114161D	203.2	406.4	196.85	127	3.2	6.4	1600	2610	1	260	386	3.2	6.4	0.79	0.85	1.3	0.83	102
EE114081/114161D	203.238	406.4	196.85	127	3.2	6.4	1630	2920	1	222	367.5	3.2	6.4	0.79	0.85	1.27	0.83	105

M241549/M241510D	203.238	292.1	125.415	101.6	1.6	3.6	934	2050	1	218	277.7	1.6	3.6	0.33	2.03	3.02	1.98	24.4
93806A/93127D	203.238	317.5	146.05	111.125	1.6	4.3	1040	2270	1	219.4	294.5	1.6	4.3	0.52	1.29	1.92	1.26	38.8
93806A/93128XD	203.238	319.977	146.05	111.125	1.6	4.3	1040	2270	1	219.4	294.5	1.6	4.3	0.52	1.29	1.92	1.26	39.8
67985/67920D	206.375	282.575	101.6	82.55	0.8	3.6	630	1600	1	231	276	0.8	3.6	0.51	2	0.51	1.3	18.2
67985/67921D	206.375	282.575	107.95	88.9	0.8	3.6	598	1410	1	219.6	271.5	0.8	3.6	0.51	1.33	1.97	1.3	18.4
EE132084/132126D	206.375	317.5	127	88.9	1.6	4	790	1450	1	234	302	1.6	4	0.31	3.2	0.31	2.1	29.6
H242649/H242610D	206.375	336.55	211.138	169.862	1.6	3.2	2014	4085	1	242	325	1.6	3.2	0.33	2	3	2	70
67989/67920D	209.55	282.575	101.6	82.55	0.8	3.6	598	1410	1	222.8	271.5	0.8	3.6	0.51	1.33	1.97	1.3	16.7
93825/93127D	209.55	317.5	146.05	111.125	1.6	4.3	990	2120	1	240	306	1.6	4.3	0.52	1.3	1.9	1.3	37.1
93825A/93127D	209.55	317.5	146.05	111.125	1.6	12.7	1040	2270	1	241	294.5	1.6	12.7	0.52	1.29	1.92	1.26	36.7
HM743345/HM743310D	209.55	333.375	149.225	114.3	1.6	6.4	1180	2380	1	247	322	1.6	6.4	0.44	1.5	2.3	1.5	45.3
96825/96140D	209.55	355.6	152.4	111.125	1.6	7.1	1130	2630	1	229.8	331.4	1.6	7.1	0.59	1.14	1.7	1.12	60
LM742745/LM742710D	212.725	285.75	98.425	76.2	0.8	3.6	600	1510	1	237	280	0.8	3.6	0.48	1.4	2.1	1.4	16.8
LM742745/LM742714D	212.725	288.925	98.425	76.2	0.8	3.6	611	1560	1	225.9	276.4	0.8	3.6	0.48	1.4	2.09	1.37	17.6
LM742749/LM742710D	215.9	285.75	98.425	76.2	0.8	3.6	611	1560	1	229.1	276.4	0.8	3.6	0.48	1.4	2.09	1.37	15.9
543085/543115D	215.9	287.338	69.85	50.8	0.8	3.6	396	945	1	229.1	272.4	0.8	3.6	0.38	1.76	2.62	1.72	11.4
LM742749/LM742714D	215.9	288.925	98.425	76.2	0.8	3.6	611	1560	1	229.1	276.4	0.8	3.6	0.48	1.4	2.09	1.37	16.8
EE130851/131401D	215.9	355.6	152.4	111.125	1.6	6.8	1250	2610	1	235.3	330	1.6	6.8	0.33	2.04	3.04	2	55.7
EE130851/131402D	215.9	355.6	158.75	117.475	0.8	6.8	1250	2610	1	235.3	330	0.8	6.8	0.33	2.04	3.04	2	57.6
EE820085/820161D	215.9	406.4	195.262	147.638	1.6	6.4	2040	3600	1	267	389	1.6	6.4	0.39	1.7	2.5	1.7	101
543086/543115D	219.075	358.775	196.85	181.44	1.6	6.4	1660	3590	1	237.9	337.2	1.6	6.4	0.33	2.03	3.02	1.98	78.3
543086/543115D	219.969	287.338	69.85	50.8	0.8	3.6	396	94	1	233.2	272.4	0.8	3.6	0.38	1.76	2.62	1.72	10.6
M244249/M244210D	220.662	314.325	131.762	106.362	1.6	6.4	1020	2390	1	250	305	1.6	6.4	0.33	2	3	2	30.9
EE130889/131401D	225.425	355.6	152.4	111.125	1.6	6.8	1190	2470	1	263	340	1.6	6.8	0.33	2	3	2	50.2
EE130889/131402D	225.425	355.6	158.75	117.475	0.8	6.7	1250	2610	1	244.8	330	0.8	6.7	0.33	2.04	3.04	2	53.6
EE430888/431576D	225.425	400.05	187.325	136.525	1.6	1.5	1620	3000	1	266	379	1.6	1.5	0.44	1.5	2.3	1.5	88
EE113089/113171D	228.397	431.8	196.85	111.125	3.2	6.4	1520	2640	1	287	410	3.2	6.4	0.88	0.77	1.1	0.75	105
EE113091/113171D	228.46	431.8	196.85	111.125	3.2	6.4	1700	2890	1	247.3	396.8	3.2	6.4	0.88	0.76	1.14	0.75	111
8573/8520D	228.6	327.025	114.3	82.55	1.6	6.4	800	2014	1	261	316	1.6	6.4	0.4	1.7	2.5	1.6	30
8573/8522D	228.6	328.625	114.3	82.55	1.6	6.4	802	1860	1	247.4	309.8	1.6	6.4	0.41	1.66	2.47	1.62	28.8
130902/131401D	228.6	355.6	146.05	111.125	1.6	6.4	1250	2610	1	247.4	330	1.6	6.4	0.33	2.04	3.04	2	49.4
EE130902/131401D	228.6	355.6	152.4	111.125	1.6	7	1190	2470	1	265	340	1.6	7	0.33	2	3	2	48.8
96900/96140D	228.6	355.6	152.4	111.125	1.6	7	1030	2340	1	270	342	1.6	7	0.59	1.1	1.7	1.1	51
HM746646/HM746610D	228.6	355.6	152.4	114.3	1.6	6.4	1310	2590	1	266	345	1.6	6.4	0.47	1.4	2.1	1.4	49.1
EE130902/131401D	228.6	355.6	152.4	111.125	1.6	7	1250	2610	1	248	330	1.6	7	0.33	2.04	3.04	2	50.4
96900/96140D	228.6	355.6	152.4	111.125	1.6	7	1130	2630	1	248.8	331.4	1.6	7	0.59	1.14	1.7	1.12	52.3
EE130902/131402D	228.6	355.6	158.75	117.475	0.8	6.8	1190	2470	1	265	341	0.8	6.8	0.33	2	3	2	50.4
M249732/M249710D	228.6	358.775	152.4	117.475	1.6	3.6	1463	3372	1	256	343	1.6	3.6	0.33	2	3	2	57
EE430902/431576D	228.6	400.05	17.325	136.525	1.6	19.8	1690	3210	1	274.2	363.1	1.6	19.8	0.44	1.54	2.29	1.5	86.7
EE430900/431576D	228.6	400.05	187.325	136.525	1.6	10.4	1620	3000	1	277	379	1.6	10.4	0.44	1.5	2.3	1.5	86.1
EE700091/700168D	228.6	425.45	209.55	158.75	1.6	7	2200	4000	1	281	406	1.6	7	0.33	2	3	2	118
HH949549/HH949510D	228.6	488.95	254	152.4	1.6	6.4	2774	4275	1	307	470	1.6	6.4	0.94	0.7	1.1	0.7	205
M249734/M249710D	231.775	358.775	152.4	117.475	1.6	6.4	1330	3170	1	250.6	342.1	1.6	6.4	0.33	2.03	3.02	1.98	55
LM446349/LM446310D	234.95	311.15	98.425	73.025	0.8	3.6	640	1610	1	259	304	0.8	3.6	0.36	1.9	2.8	1.8	18.8
LM446349NW/LM446310D	234.95	311.15	101.6	73.025	0.8	3.6	640	1610	2	259	304	0.8	3.6	0.36	1.9	2.8	1.8	19.3
8575/8520D	234.95	327.025	114.3	82.55	1.6	6.4	805	1880	1	264	316	1.6	6.4	0.41	1.7	2.5	1.6	26.1
8575/8522D	234.95	328.625	114.3	82.55	1.6	6.4	802	1860	1	253.8	309.8	1.6	6.4	0.41	1.66	2.47	1.62	26.7
96925/96140D	234.95	355.6	152.4	111.125	1.6	7	1030	2340	1	273	342	1.6	7	0.59	1.1	1.7	1.1	48.3
H247549/H247510D	234.95	384.175	238.125	193.675	1.6	6.4	2090	4450	1	276	369	1.6	6.4	0.33	2	3	2	99.7
M249736/M249710D	237.33	358.775	152.4	117.475	1.6	6.4	1330	3170	1	256.1	342.1	1.6	6.4	0.33	2	3	2	52.6

8578/8520D	241.3	327.025	114.3	82.55	1.6	6.4	805	1880	1	267	316	1.6	6.4	0.41	1.7	2.5	1.6	23.9
8578/8522D	241.3	328.625	114.3	82.55	1.6	6.4	802	1860	1	260.1	309.8	1.6	6.4	0.41	1.66	2.47	1.62	24.6
EE127095/127136D	241.3	349.148	127	101.6	1.6	6.4	950	2050	1	260.1	329.6	1.6	6.4	0.35	1.91	2.84	1.86	36.4
EE127095/127137D	241.3	350.838	127	101.6	1.6	6.4	980	2130	1	274	338	1.6	6.4	0.35	1.9	2.8	1.9	36.9
EE127095/127139D	241.3	355.498	127	101.6	1.6	6.4	980	2130	1	274	341	1.6	6.4	0.35	1.9	2.8	1.9	38.9
EE170950/171451D	241.3	368.3	120.65	85.725	1.6	6.4	870	1850	1	260.1	335.8	1.6	6.4	0.36	1.86	2.77	1.82	41.7
EE275095/275156D	241.3	393.7	157.162	109.538	1.6	6.4	1200	2570	1	293	382	1.6	6.4	0.4	1.7	2.5	1.6	68
EE275095/275161D	241.3	406.4	155.58	107.95	1.6	6.4	1200	2570	1	293	389	1.6	6.4	0.4	1.7	2.5	1.6	74.2
H249148/H249111D	241.3	406.4	215.9	184.15	1.6	6.4	2220	4450	1	287	392	1.6	6.4	0.33	2	3	2	105
EE923095/923176D	241.3	444.5	209.55	158.75	1.6	6.4	2410	4500	1	295	423	1.6	6.4	0.34	2	3	2	133
EE295950/295192D	241.3	488.95	254	196.85	1.6	6.4	2950	5700	1	315	469	1.6	6.4	0.31	2.2	3.2	2.1	207
EE127096/127136D	244.475	349.148	133.35	101.6	1.6	6.4	950	2050	1	263.3	329.6	1.6	6.4	0.35	1.91	2.84	1.86	36.3
EE126097/126149D	244.475	380.898	171.45	127	1.6	6.4	1350	2930	1	263.3	356.4	1.6	6.4	0.52	1.31	1.95	1.28	65.9
EE126097/126151D	244.475	381	171.45	127	1.6	6.4	1410	3100	1	286	367	1.6	6.4	0.52	1.3	1.9	1.3	65.1
EE170975/171451D	247.65	368.3	120.65	85.725	1.6	6.4	870	1850	1	266.5	335.8	1.6	6.4	0.36	1.86	2.77	1.82	39.4
HH249949/HH249910D	247.65	406.4	247.65	203.2	1.6	6.4	2770	6250	1	266.5	382.5	1.6	6.4	0.33	2.03	3.02	1.98	123
EE126098/126149D	249.25	380.898	171.45	127	1.6	6.4	1350	2930	1	268.1	356.4	1.6	6.4	0.52	1.31	1.95	1.28	63.5
EE126098/126151D	249.25	381	171.45	127	1.6	6.4	1410	3100	1	288	367	1.6	6.4	0.52	1.3	1.9	1.3	62.6
29875/29820D	254	323.85	63.5	50.8	0.8	1.5	263	760	1	276	315	0.8	1.5	0.35	1.9	2.9	1.9	12.4
LM249748/LM249710D	254	347.662	95.25	69.85	1.6	3.6	755	1610	1	278	336	1.6	3.6	0.33	2	3	2	23.1
LM249747NW/LM249710D	254	347.662	101.6	69.85	1.6	3.6	780	1760	2	285	338	1.6	3.6	0.33	2	3	2	25.3
M249749/M249710D	254	358.775	152.4	117.475	1.6	3.6	1300	3100	1	284	348	1.6	3.6	0.33	2	3	2	44.6
EE134100/134144D	254	365.125	130.175	98.425	1.6	6.4	990	2200	1	289	354	1.6	6.4	0.37	1.8	2.7	1.8	39.8
EE275100/275156D	254	393.7	157.162	109.538	1.6	6.4	1200	2570	1	299	382	1.6	6.4	0.4	1.7	2.5	1.6	61.9
EE275100/275161D	254	406.4	155.575	107.95	1.6	6.4	1270	3090	1	272.8	377.8	1.6	6.4	0.4	1.68	2.5	1.64	73.4
HM252343/HM252311D	254	422.275	173.038	128.588	1.6	6.8	1950	3700	1	301	408	1.6	6.8	0.33	2	3	2	86.6
HM252349NA/HM252311D	254	422.275	173.038	128.588	1.6	1.6	1730	3360	1	263.2	397.9	1.6	1.6	0.33	2.03	3.02	1.98	87.3
HM252344/HM252311D	254	422.275	173.038	128.588	1.6	6.4	1950	3700	2	301	408	1.6	6.4	0.33	2	3	2	86.8
HM252343/HM252310D	254	422.275	178.592	139.7	1.6	6.8	2128	3847	1	301	408	1.6	6.8	0.33	2	3	2	97.5
HM252343/HM252312D	254	422.91	178.592	139.7	1.6	6.8	1730	3360	1	273.4	399.1	1.6	6.8	0.33	2.03	3.02	1.98	90.3
HM252343/HM252315D	254	431.724	173.038	128.588	1.6	6.8	1730	3360	1	273.4	397.9	1.6	6.8	0.33	2.03	3.02	1.98	93.3
551002/551701D	254	431.724	173.038	128.588	1.6	6.4	1680	3420	1	272.8	388.3	1.6	6.4	0.33	2.03	3.02	1.98	93
HM252343NA/HM252315D	254	431.724	173.038	128.588	1.6	6.4	1950	3700	2	301	413	1.6	6.4	0.33	2	3	2	93.4
EE822100/822176D	254	444.5	165.1	114.3	1.6	6.4	1470	2770	1	272.8	406.2	1.6	6.4	0.42	1.62	2.42	1.59	93.9
EE941002/941951XD	254	495.3	162.245	120.65	1.6	6.4	1750	3220	1	272.8	455.7	1.6	6.4	0.4	1.68	2.5	1.64	135
EE941002/941953D	254	495.3	168.595	127	1.6	6.4	1750	3220	1	272.8	455.7	1.6	6.4	0.4	1.68	2.5	1.64	139
HH953749/HH953710D	254	533.4	276.225	165.1	1.6	6.4	3296	5225	1	332	511	1.6	6.4	0.94	0.7	1.1	0.7	260
EE221018/221576D	258.763	400.05	155.575	107.95	1.6	9.5	1300	2570	1	283.8	371.2	1.6	9.5	0.39	1.71	2.54	1.67	59.2
EE134102/134144D	260.35	365.125	130.175	98.425	1.6	6.4	990	2200	1	293	354	1.6	6.4	0.37	1.8	2.7	1.8	37.2
221026/221576D	260.35	400.05	146.05	107.95	1.6	6.4	1300	2570	1	279.2	371.2	1.6	6.4	0.39	1.71	2.54	1.67	56.7
EE221026/221576D	260.35	400.05	155.575	107.95	1.6	9.7	1260	2440	1	300	383	1.6	9.7	0.39	1.7	2.5	1.7	58.3
EE128102/128160D	260.35	406.4	149.225	117.475	1.6	3.2	1290	2870	1	302	391	1.6	3.2	0.39	1.8	2.6	1.7	66.8
EE435102/435165D	260.35	419.1	184.15	136.525	1.6	3.2	1580	3250	1	295	395	1.6	3.2	0.61	1.11	1.66	1.09	86.8
HM252349/HM252311D	260.35	422.275	173.038	128.588	1.6	6.8	1950	3700	1	304	408	1.6	6.8	0.33	2	3	2	83.1
HM252349/HM252310D	260.35	422.275	178.592	139.7	1.6	6.8	2128	3847	1	304	408	1.6	6.8	0.33	2	3	2	86.5
EE551026/551663D	260.35	422.275	178.598	139.7	1.6	6.8	1670	3200	1	302	404	1.6	6.8	0.33	2	3	2	85.3
HM252349/HM252312D	260.35	422.91	178.592	139.7	1.6	6.8	1730	3360	1	279.8	399.1	1.6	6.8	0.33	2.03	3.02	1.98	86.7
HM252349/HM252315D	260.35	431.724	173.038	128.588	1.6	6.8	1730	3360	1	279.8	397.9	1.6	6.8	0.33	2.03	3.02	1.98	89.9
HM252349NA/HM252315D	260.35	431.724	173.038	128.588	1.6	6.4	1950	3700	2	304	413	1.6	6.4	0.33	2	3	2	89.9
EE295102/295192D	260.35	488.95	254	196.85	1.6	6.4	2950	5700	1	325	469	1.6	6.4	0.31	2.2	3.2	2.1	193

HM252348NA/HM252315D	260.35	731.724	173.038	128.588	1.6	6.4	1730	3360	1	279.2	397.9	1.6	6.4	0.33	2.03	3.02	1.98	90
LM451345/LM451310D	263.525	355.6	127	101.6	1.6	3.6	1040	2550	1	276.7	342.6	1.6	3.6	0.36	1.87	2.79	1.83	33.1
LM451345/LM451312D	263.525	357.2	127	101.6	1.6	3.6	1040	2550	1	276.7	342.6	1.6	3.6	0.36	1.87	2.79	1.83	33.8
29880/29820D	266.7	323.85	63.5	50.8	0.8	1.6	252	723	1	275.9	307.1	0.8	1.6	0.35	1.95	2.9	1.91	9.57
LM251649NW/LM251610D	266.7	352.425	107.95	82.55	1.6	6.4	855	2110	2	295	343	1.6	6.4	0.32	2.1	3.2	2.1	26.3
LM451349/LM451310D	266.7	355.6	127	101.6	1.6	3.6	1060	2520	1	292	348	1.6	3.6	0.36	1.9	2.8	1.8	31.2
LM451349A/LM451310D	266.7	355.6	127	101.6	1.6	10.4	1040	2550	1	293.5	342.6	1.6	10.4	0.36	1.87	2.79	1.83	31.5
LM451349/LM451312D	266.7	357.2	127	101.6	1.6	3.6	1060	2520	1	292	348	1.6	3.6	0.36	1.9	2.8	1.8	32
EE275105/275156D	266.7	393.7	157.162	109.538	1.6	6.4	1200	2570	1	306	382	1.6	6.4	0.4	1.7	2.5	1.6	56.6
EE275105/275161D	266.7	406.4	155.575	107.95	1.6	6.4	1200	2570	1	306	389	1.6	6.4	0.4	1.7	2.5	1.6	62.8
EE551050/551663D	266.7	422.275	178.598	139.7	1.6	6.8	1670	3200	1	306	404	1.6	6.8	0.33	2	3	2	81.6
EE551050/551701D	266.7	431.724	173.038	128.588	1.6	6.8	1670	3200	1	306	408	1.6	6.8	0.33	2	3	2	84.9
M252349/M252310D	269.875	381	158.75	123.825	1.6	6.4	1360	3200	1	304	370	1.6	6.4	0.33	2	3	2	51.6
EE275108/275156D	273.05	393.7	157.162	109.538	1.6	6.4	1200	2570	1	309	382	1.6	6.4	0.4	1.7	2.5	1.6	53.3
EE275108/275161D	273.05	406.4	155.575	107.95	1.6	6.4	1270	3090	1	291.9	377.8	1.6	6.4	0.4	1.68	2.5	1.64	63.8
L555233/L555210D	279.4	374.65	104.775	79.375	1.6	6.4	810	2020	1	300	362	1.6	6.4	0.4	1.68	2.5	1.64	28.5
EE722110/722186D	279.4	469.9	200.025	149.225	1.6	9.7	2030	4150	1	336	451	1.6	9.7	0.38	1.8	2.7	1.7	127
EE295110/295192D	279.4	488.95	254	196.85	1	1.3	2950	5700	1	329	469	1	1.3	0.31	2.2	3.2	2.1	177
LM654642/LM654610D	279.982	380.898	139.7	107.95	1.6	3.6	1140	2820	1	293.2	370.2	1.6	3.6	0.43	1.57	2.34	1.53	42.7
EE128114/128160D	280	406.4	149.225	117.475	1.6	6.4	1290	2870	1	315	391	1.6	6.4	0.39	1.8	2.6	1.7	56.9
EE101103/101601D	280.192	406.4	120.65	85.725	1.6	6.8	890	1740	1	315	391	1.6	6.8	0.41	1.7	2.5	1.6	42.5
EE128111/128160D	280.192	406.4	149.225	117.475	1.6	6.8	1290	2870	1	316	391	1.6	6.8	0.39	1.8	2.6	1.7	56.8
545112/545142D	285.75	358.775	76.2	53.975	1.6	3.6	430	1150	1	307	348	1.6	3.6	0.49	1.4	2	1.3	15.8
LM654649/LM654610D	285.75	380.898	139.7	107.95	1.6	3.6	1168	3040	1	316	371	1.6	3.6	0.43	1.6	2.3	1.6	42
EE921124/921851D	285.75	469.9	177.785	127	1.6	9.7	1890	3600	1	338	450	1.6	9.7	0.29	2.3	3.4	2.3	105
EE921124/921876D	285.75	476.25	177.785	127	1.6	9.7	1960	3460	1	310.8	439.8	1.6	9.7	0.29	2.31	3.44	2.26	111
EE147112/147198D	285.75	501.65	203.2	120.65	3.2	6.4	2160	4100	1	350	483	3.2	6.4	0.83	0.81	1.2	0.79	151
M255449/M255410DC	288.925	406.4	165.1	130.175	1.6	6.4	1843	4270	1	324	395	1.6	6.4	0.33	2	3	2	63
M255448/M255410D	288.925	406.4	165.1	130.175	1.6	9.5	1720	4420	1	313.9	387.5	1.6	9.5	0.34	2	2.97	1.95	64.6
L555249/L555210D	292.1	374.65	104.775	79.375	1.6	6.4	810	2020	1	309	362	1.6	6.4	0.4	1.68	2.5	1.64	25.2
EE722115/722186D	292.1	469.9	200.025	149.225	1.6	9.5	2100	4370	1	317.1	430.1	1.6	9.5	0.38	1.79	2.67	1.75	118
EE224115/224205D	292.1	520.7	228.6	165.1	1.6	6.4	2660	4900	1	345	492	1.6	6.4	0.33	2.1	3.1	2	180
EE790114/790223D	292.1	558.8	298.45	222.25	1.6	6.4	4250	8200	1	362	537	1.6	6.4	0.39	1.7	2.5	1.7	312
EE790116/790223D	292.1	558.8	298.45	222.25	1.6	19.8	4040	8000	1	337.7	515	1.6	19.8	0.4	1.71	2.54	1.67	306
EE291175/291751D	298.45	444.5	146.05	98.425	1.6	8	1170	2280	1	339	427	1.6	8	0.38	1.8	2.7	1.7	63.9
HH258248/HH258210D	299.974	495.3	301.625	247.65	1.6	8	4200	9800	1	342	467	1.6	8	0.33	2.03	3.02	1.98	205
HM256849/HM256810D	300.038	422.275	174.625	136.525	1.6	6.4	1950	4520	1	337	411	1.6	6.4	0.33	2	3	2	71.5
329115/329173D	300.787	438.048	161.925	123.825	1.6	6.4	1510	3450	1	320.6	411.6	1.6	6.4	0.33	2.04	3.04	2	74.4
L357049/L357010D	304.8	393.7	107.95	82.55	1.6	6.4	910	2280	1	334	385	1.6	6.4	0.36	1.9	2.8	1.8	30
L357049NW/L357010D	304.8	393.7	107.95	82.55	1.6	6.4	910	2280	2	335	385	1.6	6.4	0.36	1.9	2.8	1.8	30.2
EE109120/109163D	304.8	412.75	123.825	92.075	1.6	6.4	1090	2520	1	337	401	1.6	6.4	0.43	1.6	2.4	1.6	42.1
329120/329173D	304.8	438.048	161.925	123.825	1.6	6.4	1510	3450	1	324.6	411.6	1.6	6.4	0.33	2.04	3.04	2	72
EE129120X/129120D	304.8	438.048	165.1	120.65	1.6	6.4	1380	3200	1	334	411	1.6	6.4	0.42	1.62	2.42	1.59	71.4
291201/291751D	304.8	444.5	139.7	98.425	1.6	6.4	1240	2760	1	324.6	413.5	1.6	6.4	0.38	1.79	2.66	1.75	64.5
EE291201/291751D	304.8	444.5	146.05	98.425	1.6	8	1170	2280	1	342	427	1.6	8	0.38	1.8	2.7	1.7	60.5
EE941205/941951XD	304.8	495.3	162.245	120.65	1.6	6.4	1750	3220	1	324.6	455.7	1.6	6.4	0.4	1.68	2.5	1.64	107
EE941205/941953D	304.8	495.3	168.595	127	1.6	6.4	1840	3550	1	352	471	1.6	6.4	0.4	1.7	2.5	1.7	111
EE724119/724196D	304.8	495.3	195.85	146.05	1.6	16	2180	4680	1	343.8	457.4	1.6	16	0.4	1.68	2.5	1.64	135
EE724120/724196D	304.8	495.3	196.85	146.05	1.6	16	2130	4300	1	364	474	1.6	16	0.4	1.7	2.5	1.6	130
EE790120/790223D	304.8	558.8	298.45	222.25	1.2	1.6	4250	8200	1	364	537	1.2	1.6	0.39	1.7	2.5	1.7	298

EE148122/148221D	311.15	558.8	190.5	111.125	3.2	9.7	2140	4250	1	377	521	3.2	9.7	0.88	0.77	1.1	0.75	173
EE291250/291751D	317.5	444.5	146.05	98.425	1.6	8	1170	2280	1	349	427	1.6	8	0.38	1.8	2.7	1.7	53.4
HM259049/HM259010D	317.5	447.675	180.975	146.05	1.6	3.6	2210	5130	1	353	435	1.6	3.6	0.33	2	3	2	84
H961649/H961610D	317.5	622.3	304.8	174.625	3.2	14.3	3900	7550	1	414	597	3.2	14.3	0.94	0.72	1.1	0.7	386
EE971298/972102D	329.87	533.4	165.1	114.3	1.6	4.7	1810	3600	1	383	510	1.6	4.7	0.33	2	3	2	125
EE971298/972103D	329.87	533.4	174.635	123.825	1.6	4.7	1810	3600	1	383	510	1.6	4.7	0.33	2	3	2	130
EE971298/972151D	329.87	546.1	177.8	152.4	3.2	4.7	1810	3600	1	383	517	3.2	4.7	0.33	2	3	2	151
EE161300/161901	330.2	482.6	133.35	88.9	1.6	7	1210	2840	1	377	465	1.6	7	0.5	1.4	2	1.3	73.6
EE161300/161901D	330.2	482.6	133.35	88.9	1.6	7	1050	2500	1	351.4	453.4	1.6	7	0.5	1.35	2.01	1.32	74.8
EE526130/526191D	330.2	482.6	177.8	127	1.6	3.2	2130	4750	1	370	465	1.6	3.2	0.4	1.7	2.5	1.6	100
HM261049/HM261010D	333.375	469.9	190.5	152.4	1.6	6.4	2340	5400	1	375	457	1.6	6.4	0.33	2	3	2	98
LM961548/LM961511D	342.9	457.098	142.875	101.6	1.6	3.2	1170	3050	1	378	444	1.6	3.2	0.71	0.95	1.4	0.93	59.4
EE971354/972102D	342.9	533.4	165	114.3	1.6	4.7	1810	3600	1	390	510	1.6	4.7	0.33	2	3	2	116
EE971354/972103D	342.9	533.4	174.63	123.825	1.6	4.8	2261	4180	1	390	510	1.6	4.8	0.33	2	3	2	130
EE971354/972151D	342.9	546.1	177.8	152.4	3.2	4.7	1810	3600	1	390	517	3.2	4.7	0.33	2	3	2	141
EE161363/161901D	346.075	482.6	133.35	88.9	1.6	7	1210	2840	1	385	465	1.6	7	0.5	1.4	2	1.3	64.8
HM262749/HM262710D	346.075	488.95	200.025	158.75	1.6	6.4	2500	5980	1	386	475	1.6	6.4	0.33	2	3	2	110
EE333137/333203D	349.25	514.35	193.675	152.4	1.6	6.4	2270	5450	1	394	495	1.6	6.4	0.37	1.8	2.7	1.8	130
EE161394/161901D	354.013	482.6	133.35	88.9	1.6	7	1050	2500	1	375.2	453.4	1.6	7	0.5	1.35	2.01	1.32	61.6
L163149/L163110D	355.6	444.5	136.525	111.125	1.6	3.6	1180	3460	1	381	435	1.6	3.6	0.31	2.2	3.3	2.2	46
EE161400/161901D	355.6	482.6	133.35	88.9	1.6	7	1210	2840	1	390	465	1.6	7	0.5	1.4	2	1.3	59.3
EE231400/231976D	355.6	501.65	155.575	107.95	1.6	6.4	1740	4040	1	403	489	1.6	6.4	0.44	1.5	2.3	1.4	87
EE333140/333203D	355.6	514.35	193.675	152.4	1.6	6.4	2270	5450	1	397	495	1.6	6.4	0.37	1.8	2.7	1.8	125
HM265049/HM265010D	368.249	523.875	214.312	169.862	1.6	6.4	2980	7130	1	400	499	1.6	6.4	0.33	2	3	2	140
EE181453/182351D	368.3	596.9	203.2	133.35	2.3	9.7	2930	5560	1	428	570	2.3	9.7	0.41	1.7	2.5	1.6	188
231462/231976DC	371.475	501.65	155.575	107.95	1.6	6.4	1740	4040	1	411	489	1.6	6.4	0.44	1.5	2.3	1.4	76.5
EE231462/232026D	371.475	514.35	155.575	107.95	1.6	6.4	1360	3300	1	411	495	1.6	6.4	0.44	1.5	2.3	1.5	83.8
EE192148/192201D	377.825	508	139.7	88.9	1.6	6.4	1180	2980	1	397.6	479.7	1.6	6.4	0.53	1.27	1.89	1.24	68.8
EE192150/192201D	381	508	139.7	88.9	1.6	6.4	1180	2980	1	400.8	479.7	1.6	6.4	0.53	1.27	1.89	1.24	66.7
HM266447/HM266410D	381	546.1	222.25	177.8	1.6	6.4	3150	8000	1	428	531	1.6	6.4	0.33	2	3	2	162
HM268730/HM268710D	381	590.55	244.475	193.675	1.6	6.4	3100	8350	1	425	561	1.6	6.4	0.33	2.03	3.02	1.98	218
LL365340/LL365310D	384.175	441.325	68.262	52.388	1.6	6.4	360	1060	1	399	433	1.6	6.4	0.34	1.99	2.96	1.94	14.1
HM266449/HM266410D	384.175	546.1	222.25	177.8	1.6	6.4	3030	6980	1	429	531	1.6	6.4	0.33	2	3	2	161
LM665949/LM665910D	385.762	514.35	177.8	139.7	1.6	6.4	2120	5550	1	415	495	1.6	6.4	0.42	1.61	2.4	1.58	90
EE234154/234213D	393.7	539.75	142.875	101.6	1.6	6.4	1400	3300	1	438	526	1.6	6.4	0.48	1.4	2.1	1.4	84.7
EE234154/234216D	393.7	546.1	158.75	117.475	1.6	6.4	1400	3300	1	438	529	1.6	6.4	0.48	1.4	2.1	1.4	97
EE234154/234221D	393.7	558.8	146.05	104.775	1.6	6.4	1490	3810	1	413.5	515	1.6	6.4	0.48	1.42	2.11	1.39	104
EE234154/234223D	393.7	560.248	146.05	104.78	1.6	6.4	1400	3300	1	438	536	1.6	6.4	0.48	1.4	2.1	1.4	100
EE234156/234213D	396.875	539.75	142.875	101.6	1.6	6.4	1400	3300	1	439	526	1.6	6.4	0.48	1.4	2.1	1.4	82.5
EE234156/234216D	396.875	546.1	158.75	117.475	1.6	6.4	1400	3300	1	439	529	1.6	6.4	0.48	1.4	2.1	1.4	94.6
EE234156/234221D	396.875	558.8	146.05	104.775	1.6	6.4	1490	3810	1	416.7	515	1.6	6.4	0.48	1.42	2.11	1.39	102
EE234160/234213D	406.4	539.75	142.875	101.6	1.6	6.4	1600	4180	1	444	526	1.6	6.4	0.48	1.4	2.1	1.4	82.6
EE234160/234216D	406.4	546.1	158.75	117.475	1.6	6.4	1400	3300	1	444	529	1.6	6.4	0.48	1.4	2.1	1.4	94.2
M667944/M667910D	406.4	546.1	185.738	144.462	1.6	6.4	2270	5950	1	449	536	1.6	6.4	0.42	1.6	2.4	1.6	113
M667944/M667911D	406.4	546.1	185.738	147.638	1.6	6.4	2270	5950	1	449	537	1.6	6.4	0.42	1.6	2.4	1.6	114
EE234160/234221D	406.4	558.8	146.05	104.775	1.6	6.4	1490	3810	1	427.2	515	1.6	6.4	0.48	1.42	2.11	1.39	95
EE285160/285228D	406.4	574.675	157.162	106.362	1.6	6.8	1580	3700	1	453	552	1.6	6.8	0.5	1.4	2	1.3	111
EE833160X/833233D	406.4	590.55	228.6	174.625	1.6	9.5	3060	7070	1	433.4	560	1.6	9.5	0.32	2.08	3.1	2.04	188
EE736160/736239D	406.4	609.524	177.8	133.35	1.6	8	2590	5600	1	459	585	1.6	8	0.35	1.9	2.9	1.9	163
EE911600/912401D	406.4	609.6	187.325	123.825	1.6	6.8	2520	5500	1	459	586	1.6	6.8	0.38	1.8	2.6	1.7	172

EE571602/572651D	406.4	673.1	192.639	127	1.6	6.4	3000	6200	1	479	646	1.6	6.4	0.4	1.7	2.5	1.7	251
EE571602/572653D	406.4	673.1	192.639	152.4	1.6	6.4	2530	5240	1	427.2	630	1.6	6.4	0.4	1.68	2.5	1.64	242
M667948/M667911D	409.575	546.1	185.738	147.638	1.6	6.4	2280	5740	1	430.4	530	1.6	6.4	0.42	1.62	2.42	1.59	110
EE285162/285228D	409.575	574.675	157.162	106.362	1.6	6.8	1580	3700	1	455	552	1.6	6.8	0.5	1.4	2	1.3	109
EE911618/912401D	411.162	609.6	187.325	123.825	1.6	6.8	2520	5500	1	461	586	1.6	6.8	0.38	1.8	2.6	1.7	167
M268749/M268710DC	415.925	590.55	244.475	193.675	1.6	6.4	3710	9170	1	465	576	1.6	6.4	0.33	2	3	2	205
EE328167/328268D	425.45	685.698	311.15	234.95	3.2	12.7	5200	11400	1	497	661	3.2	12.7	0.4	1.7	2.5	1.7	410
EE241693/242376D	430.213	603.25	153.289	98.425	1.6	6.4	1680	3770	1	451	565	1.6	6.4	0.53	1.28	1.91	1.26	109
EE241693/242377D	430.213	603.25	159.639	104.775	1.6	6.4	1680	3770	1	451	565	1.6	6.4	0.53	1.28	1.91	1.26	113
LM869448/LM869410D	431.8	571.5	155.575	111.125	1.6	3.2	1880	4850	1	471	560	1.6	3.2	0.54	1.25	1.8	1.3	100
EE241701/242376D	431.8	603.25	153.289	98.425	1.6	6.4	1680	3770	1	452.6	565	1.6	6.4	0.53	1.28	1.91	1.26	107
EE241701/242377D	431.8	603.25	159.639	104.775	1.6	6.4	1670	4100	1	446	561	1.6	6.4	0.53	1.28	1.91	1.25	124
EE571703/572651D	431.8	673.1	192.639	127	1.6	6.4	3000	6200	1	491	646	1.6	6.4	0.4	1.7	2.5	1.7	225
EE571703/572653D	431.8	673.1	192.639	152.4	1.6	6.4	3000	6200	1	491	649	1.6	6.4	0.4	1.7	2.5	1.7	235
EE737173/737261D	441.325	660.4	195.262	138.112	1.6	10.4	2650	5550	1	499	636	1.6	10.4	0.37	1.8	2.7	1.8	198
M270749/M270710D	447.675	635	257.175	206.375	1.6	6.4	4180	10450	1	502	617	1.6	6.4	0.33	2	3	2	245
M270749/M270720D	447.675	649.924	257.175	206.375	1.6	6.4	3930	10500	1	468.5	605	1.6	6.4	0.33	2.03	3.02	1.98	272
EE244180/244236D	457.2	596.9	165.1	120.65	1.6	9.7	2050	5220	1	500	581	1.6	9.7	0.4	1.7	2.5	1.6	110
EE737181/737261D	457.2	660.4	195.262	138.112	1.6	10.4	2650	5550	1	507	636	1.6	10.4	0.37	1.8	2.7	1.8	182
EE671801/672875D	457.2	730.148	254	177.8	1.6	9.7	3900	8350	1	527	699	1.6	9.7	0.39	1.7	2.6	1.7	368
M272749/M272710D	479.425	679.45	276.225	222.25	1.6	6.4	4760	12060	1	535	663	1.6	6.4	0.33	2	3	2	302
LM272249/LM272210D	482.6	615.95	184.15	146.05	1.6	6.4	2380	6900	1	522	604	1.6	6.4	0.37	1.8	2.7	1.8	126
EE243190/243251D	482.6	634.873	177.8	142.875	1.6	6.4	2290	6600	1	530	622	1.6	6.4	0.34	2	2.9	1.9	144
EE640191/640261D	488.671	660.4	206.375	158.75	1.6	6.4	2920	7550	1	535	643	1.6	6.4	0.31	2.2	3.3	2.1	185
EE640191/640262D	488.671	666.674	206.375	158.75	1.6	6.4	3100	7910	1	510	630	1.6	6.4	0.31	2.2	3.27	2.15	194
LM772748/LM772710D	488.95	634.873	180.975	136.525	1.6	6.4	2350	6350	1	532	623	1.6	6.4	0.47	1.4	2.1	1.4	134
EE640192/640261D	488.95	660.4	206.375	158.75	1.6	6.4	2920	7550	1	535	643	1.6	6.4	0.31	2.2	3.3	2.1	185
EE640192/243251D	488.95	666.674	206.375	158.75	1.6	6.4	3100	7910	1	510	630	1.6	6.4	0.31	2.2	3.27	2.15	194
EE243192/243251D	489.026	634.873	177.8	142.875	1.6	6.4	2610	6980	1	533	622	1.6	6.4	0.35	1.9	2.9	1.8	130
EE243196/243251D	498.475	634.873	177.8	142.875	1.6	6.4	2610	6980	1	538	622	1.6	6.4	0.35	1.9	2.9	1.8	125
M274149/M274110D	501.65	711.2	292.1	231.775	1.6	6.4	4810	12800	1	525	680	1.6	6.4	0.33	2.03	3.02	1.98	346
EE981992/982901	505.968	736.6	186.502	114.3	1.6	6.4	2780	6800	1	571	712	1.6	6.4	0.48	1.4	2.1	1.4	242
EE982003/982901	508	736.6	186.502	114.3	1.6	6.4	2780	6800	1	572	712	1.6	6.4	0.48	1.4	2.1	1.4	240
EE426200/426331D	508	838.2	304.8	222.25	3.2	9.7	6200	14100	1	595	804	3.2	9.7	0.48	1.4	2.1	1.4	630
EE982028/982901D	514.35	736.6	186.502	114.3	1.6	6.4	2520	5150	1	540	690	1.6	6.4	0.48	1.42	2.11	1.39	213
EE982051/982901D	520.7	736.6	186.502	114.3	1.6	6.4	2880	6370	1	579	712	1.6	6.4	0.48	1.4	2.1	1.4	210
EE522102/523088D	533.4	784.225	190.5	120.65	1.6	6.4	3000	7000	1	596	752	1.6	6.4	0.48	1.4	2.1	1.4	276
EE626210/626321D	533.4	812.8	269.875	187.325	3.2	9.7	4950	11300	1	607	783	3.2	9.7	0.44	1.5	2.3	1.5	465
LL475048/LL475011D	534.988	622.3	111.125	82.55	1.6	3.6	1000	3080	1	555	610	1.6	3.6	0.37	1.83	2.73	1.79	47.1
M276449/M276410DG2	536.575	761.873	311.15	247.65	1.6	6.4	5960	15200	1	576	726	1.6	6.4	0.33	2	3	2	430
EE542215/542291D	546.1	736.6	165.1	114.3	3.2	6.4	2190	5200	1	598	715	3.2	6.4	0.51	1.3	2	1.3	168
L476549/L476510D	549.275	692.15	174.625	136.525	3.2	6.4	2320	6950	1	579	666	3.2	6.4	0.38	1.79	2.67	1.75	135
EE542220/542291D	558.8	736.6	165.1	114.3	3.2	6.4	2050	5400	1	594	705	3.2	6.4	0.51	1.32	1.96	1.29	166
EE843220/843291D	558.8	736.6	187.328	138.112	1.6	6.4	3240	7880	1	591	708	1.6	6.4	0.35	1.9	2.9	1.8	190
LM377449/LM377410DC	558.8	736.6	225.425	177.8	1.6	6.4	4080	11020	1	591	708	1.6	6.4	0.35	1.9	2.9	1.8	150
EE843220/843292D	558.8	742.95	187.328	138.113	1.6	6.4	2960	8050	1	580	710	1.6	6.4	0.34	1.97	2.93	1.93	206
EE929225/929341D	565.15	863.6	317.5	228.6	3.2	8	6550	15200	1	638	832	3.2	8	0.34	2	2.9	1.9	613
M278749/M278710DAG2	571.5	812.8	333.375	263.525	1.6	6.4	6120	15200	1	615	774	1.6	6.4	0.33	2	3	2	520
EE542220/542291D	588.8	736.6	165.1	114.3	3.2	6.4	2190	5200	1	604	715	3.2	6.4	0.51	1.3	2	1.3	154
EE843220/843291D	588.8	736.6	187.328	138.112	1.6	6.4	3000	7800	1	606	718	1.6	6.4	0.34	2	2.9	1.9	195

LM377449/LM377410D	588.8	736.6	225.425	177.8	1.6	6.4	3950	11200	1	607	720	1.6	6.4	0.35	1.9	2.9	1.9	247
EE843220/843292D	588.8	742.95	187.328	138.112	1.6	6.4	3000	7800	1	606	721	1.6	6.4	0.34	2	2.9	1.9	203
649237/649311D	602.945	787.4	206.375	158.75	1.6	6.4	3820	10070	1	655	771	1.6	6.4	0.37	1.8	2.7	1.8	240
EE649237/649313D	602.945	793.75	206.375	158.75	1.6	6.4	3450	9600	1	655	774	1.6	6.4	0.37	1.8	2.7	1.8	253
EE649239/649311D	607.72	787.4	206.375	158.75	1.6	6.4	3450	9600	1	658	771	1.6	6.4	0.37	1.8	2.7	1.8	237
EE649239/649313D	607.72	793.75	206.375	158.75	1.6	6.4	3390	9940	1	630	755	1.6	6.4	0.37	1.82	2.7	1.78	254
LL579749/LL579710D	609.6	717.55	127	95.25	1.6	6.4	1530	4600	1	642	708	1.6	6.4	0.4	1.7	2.5	1.6	81.7
EE649240/649311D	609.6	787.4	206.375	158.75	1.6	6.4	3820	10070	1	659	771	1.6	6.4	0.37	1.8	2.7	1.8	232
EE649240/649313D	609.6	793.75	206.375	158.75	1.6	6.4	3450	9600	1	659	774	1.6	6.4	0.37	1.8	2.7	1.8	243
EE743240/743321D	609.6	812.8	190.5	146.05	3.2	6.4	3400	8360	1	664	785	3.2	6.4	0.33	2	3	2	250
L281148/L281110DA	660.4	812.8	203.2	158.75	3.2	6.4	3250	10300	1	693	789	3.2	6.4	0.37	1.8	2.69	1.76	199
EE749260/749335D	660.4	854.924	186.329	135.9	2.4	9.5	3120	8010	1	690	820	2.4	9.5	0.35	1.92	2.86	1.88	238
673KBE7951	673.1	793.75	133.35	98.426	1.6	6.4	1750	5850	1	710	781	1.6	6.4	0.36	1.9	2.8	1.8	108
EE655270/655346D	685.8	876.3	200.025	152.4	1.6	6.4	3510	10800	1	710	850	1.6	6.4	0.42	1.62	2.42	1.59	280
EE755280/755361D	711.2	914.4	190.5	139.7	1.6	6.4	3610	9170	1	767	891	1.6	6.4	0.37	1.8	2.7	1.8	265
EE755285/75361D	723.9	914.4	187.325	139.7	1.6	3.2	3020	8930	1	745	880	1.6	3.2	0.38	1.78	2.65	1.74	266
EE752295/752381D	749.3	965.2	187.325	133.35	1.6	6.4	3130	9590	1	775	920	1.6	6.4	0.4	1.68	2.5	1.64	320
LM283649/LM283610D	749.3	990.6	338	265	3.2	6.4	7850	23900	1	775	960	3.2	6.4	0.32	2.12	3.15	2.07	681
EE752300/752381D	762	965.2	187.325	133.35	1.6	6.4	3580	9800	1	815	943	1.6	6.4	0.4	1.7	2.5	1.6	290
EE752305/752381D	774.7	965.2	187.325	133.35	1.6	6.4	3580	9800	1	822	943	1.6	6.4	0.4	1.7	2.5	1.6	265
EE762320/762401D	812.8	1016	190.5	146.05	3.2	6.4	3580	10200	1	876	994	3.2	6.4	0.43	1.6	2.3	1.6	350
EE762320/762420XD	812.8	1066.8	190.5	146.05	3.2	6.4	3580	10200	1	867	1019	3.2	6.4	0.43	1.6	2.3	1.6	445
LL686947/LL686910D	914.4	1066.8	139.7	101.6	3.2	6.4	2460	8000	1	955	1048	3.2	6.4	0.4	1.7	2.5	1.6	190
940KBE1270-1	939.8	1270	547.2	317.5	3.2	12.7	9200	27550	1	976	1250	3.2	12.7	0.88	0.77	1.15	0.8	1540
LL687949/LL687910D	977.9	1130.3	139.7	101.6	3.2	6.4	2510	8750	1	1019	1112	3.2	6.4	0.43	1.6	2.3	1.5	210
LL889049/LL889010D	1270	1435.1	146.05	101.6	3.2	6.4	2800	11100	1	1315	1413	3.2	6.4	0.57	1.2	1.8	1.2	303
LL989349/LL989310D	1431.925	1584.325	130.175	79.375	3.2	6.4	2440	8850	1	1460	1560	3.2	6.4	0.62	1.09	1.62	1.06	259
EE299615/299711D	1562.1	1086.575	279.4	196.85	3.2	9.7	7210	28000	1	1632	1777	3.2	9.7	0.48	1.4	2.1	1.4	1045